COUNTY SURVEYORS FILE DATA
DO NOT REMOVE FROM OFFICE

COUNTY SURVEYOR'S OFFICE
DOUGLAS COUNTY, OREGON

SURVEY FOR PARTY WALL AGREEMENT IN LOT 5, BLOCK 18, ROSEBURG, OREGON

REGISTERED
OREGON
LAND SURVEYOR
James W. Byron
JAMES W. BYRON
303

FRED M. DARBY — COUNTY SURVEYOR
SURVEYED JAN. 16, 1963 — BY
JAMES W. BYRON - DEPUTY — SCALE 1" = 5'
SURVEYED FOR ROSEBURG PLAZA CO.

NOTE: BEARINGS BASED ON N 28° 00' E, RECORD.

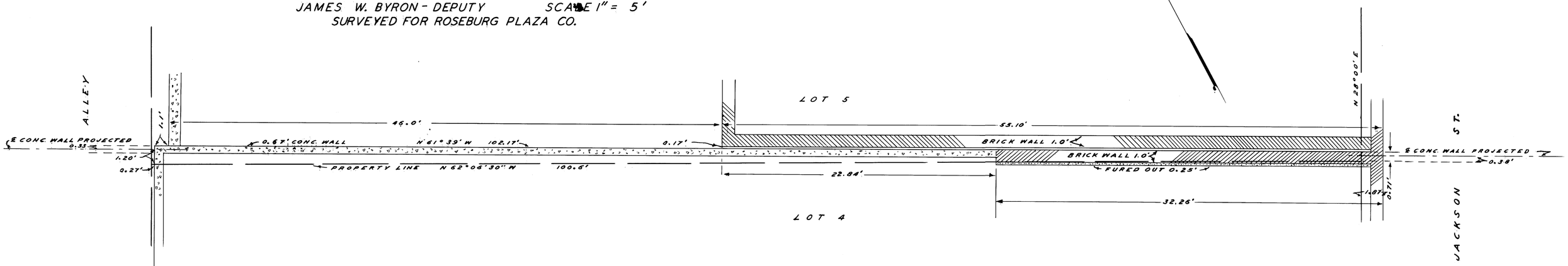

C.S. 52/26
N 24-49

N 24-49