FILED
Date: 1/10/2013 By: NLW
This survey consists of:
Map: DS-112 thru 121
Narrative:
Corner Rpt:
DOUGLAS COUNTY SURVEYOR

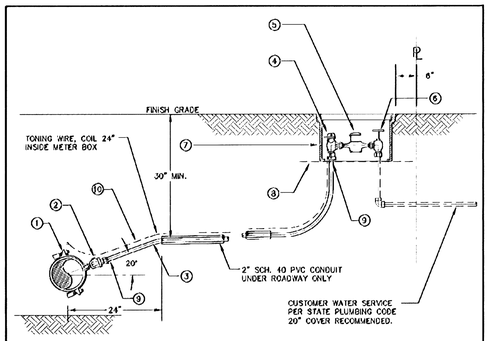

ITEM	SIZE	DESCRIPTION	SPECIFICATION
1	AS REQ'D	SADDLE	FORD S91 (ALL C900 12" OR LESS); FORD/ROMAC 101S OR 202S; MUELLER H-13000 SERIES; 3/4" FIP TAP
2	3/4"	BALL CORP. STOP	MIP x PEP PACK JOINT; FORD FB1101-3, MUELLER E-25029
3	3/4"	SERVICE PIPE	HDPE (PE 3408), SDR 7, 200 PSI, PS FITTING COMPATIBLE, NSF 61
4	3/4"	ANGLE BALL METER VALVE	3/4" PEP PACK JOINT INLET x METER SWIVEL NUT OUTLET FORD BA83-332W OR BA83-232W, MUELLER E-24259
5	5/8" x 3/4"	WATER METER	NIVENSYS SR-II, GALLON READ (TRI CITY SUPPLIES)
6	3/4"	SERVICE VALVE ANGLE GLOBE	METER SWIVEL NUT INLET X 3/4" FIP OUTLET FORD GA13-332 (TRI CITY SUPPLIES)
7	11"x18"x12"(D)	METER BOX	MID-STATES PLASTICS; MSBCF 1118-12 WITH DUCTILE IRON READ LID
8	13" x 20"	FELT PAPER	90-LB FELT PAPER, ASPHALT SATURATED
9	3/4"	STIFFENER	304 SS INSERT STIFFENER, FORD 70 SERIES; MUELLER S05141
10	12 GA.	TRACER WIRE	12 GA. COPPER WIRE WITH BLUE 30 MIL THICK HDPE INSULATION

SEE W-150 FOR TRENCH DETAILS

Tri-City Joint Water & Sanitary Authority
215 N. Old Pacific Highway
Myrtle Creek, Oregon 97457
541.863.3276

STANDARD 3/4" WATER SERVICE CONNECTION — DETAIL NO. W-600 — 7/13/06

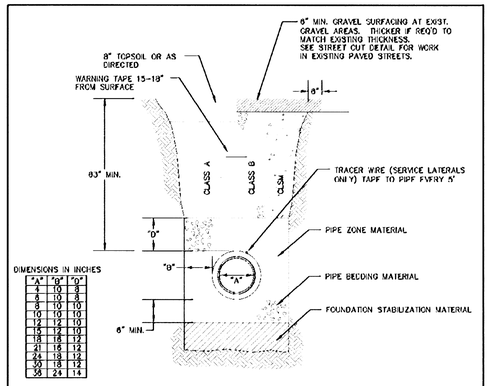

DIMENSIONS IN INCHES

"A"	"B"	"D"
4	10	8
6	10	8
8	10	10
10	10	10
12	12	10
15	12	10
18	18	12
21	18	12
24	18	12
30	18	12
36	24	14

NOTES:

1. TRENCH EXCAVATION SHALL BE CONDUCTED IN A SAFE MANNER WITH ALL NECESSARY BRACING AND SHORING PROVIDED FOR COMPLIANCE WITH OSHA.
2. FOUNDATION STABILIZATION SHALL BE PROVIDED WHEN MATERIAL AT BOTTOM OF TRENCH IS UNSUITABLE IN THE OPINION OF THE AUTHORITY TO PROVIDE A STABLE TRENCH BASE.
3. CONSTRUCTION IN DOUGLAS COUNTY RIGHT-OF-WAY SHALL COMPLY WITH COUNTY STANDARDS AND TRI CITY STANDARDS.
4. CLASS B BACKFILL REQUIRED IN ALL ROADWAYS AND TRAFFIC PATHS EXCEPT WHERE CLSM BACKFILL IS REQUIRED BY DOUGLAS COUNTY, ODOT, OR AUTHORITY.
5. TRACER WIRE REQUIRED AT SERVICE LATERALS. WIRE SHALL BE 12 GA. MINIMUM COPPER WIRE WITH GREEN 30 MIL THICK HDPE INSULATION RATED FOR DIRECT BURY. USE APPROVED WATERPROOF SPLICE AT ALL CONNECTIONS.
6. WARNING TAPE SHALL BE 6" WIDE, 4 MIL THICK, APWA GREEN, READING "CAUTION SEWER LINE BURIED BELOW".
7. MATERIALS SHALL BE IN ACCORDANCE WITH THE AUTHORITY SANITARY SEWER DESIGN STANDARDS MANUAL.
8. COMPACT ALL FILL AS SPECIFIED.

Tri-City Joint Water & Sanitary Authority
215 N. Old Pacific Highway
Myrtle Creek, Oregon 97457
541.863.3276

TYPICAL TRENCH DETAIL SANITARY SEWER — DETAIL NO. S-100 — 5/17/05

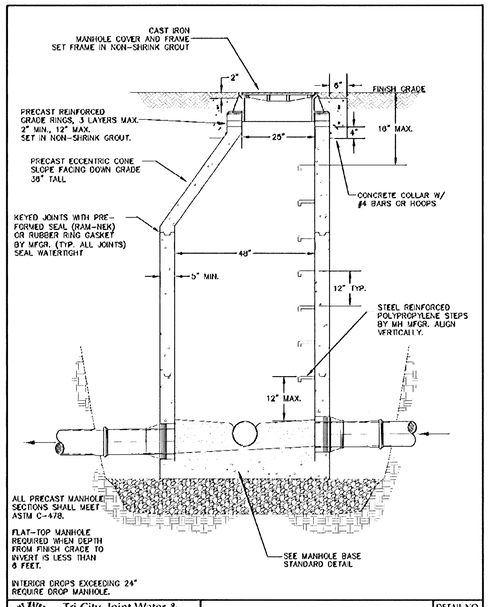

Tri-City Joint Water & Sanitary Authority
215 N. Old Pacific Highway
Myrtle Creek, Oregon 97457
541.863.3276

STANDARD MANHOLE PIPES LESS THAN 24" DIAM. — DETAIL NO. S-200 — 5/17/05

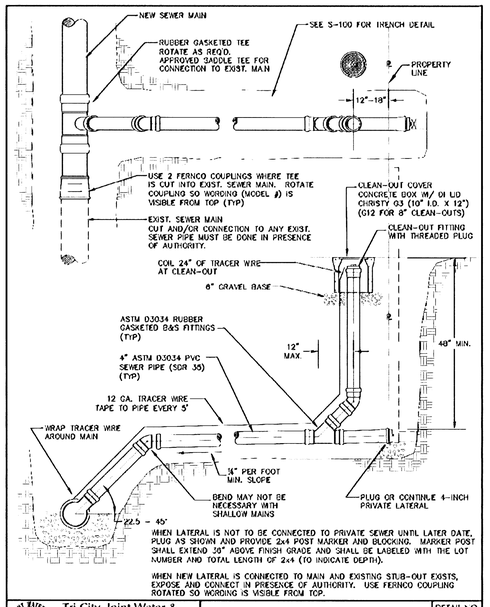

Tri-City Joint Water & Sanitary Authority
215 N. Old Pacific Highway
Myrtle Creek, Oregon 97457
541.863.3276

STANDARD SERVICE CONNECTION AND LATERAL — DETAIL NO. S-300 — 11/30/06

(HORIZONTAL) BEARING AREA OF THRUST BLOCKS IN SQUARE FEET									(VERTICAL UP) VOLUME OF THRUST BLOCK IN CUBIC YARDS			
FITTING SIZE	TEE, WYE, DEAD END AND HYDRANT	STRADDLE BLOCK	90° BEND	TEE PLUGGED ON RUN A-1	TEE PLUGGED ON RUN A-2	45° BEND	22-1/2° BEND	11-1/4° BEND	90° BEND	45° BEND	22-1/2° BEND	11-1/4° BEND
4	1.0	1.0	1.4	1.0	1.4	0.8	0.4	0.2	0.82	0.45	0.23	0.11
6	2.1	2.1	3.0	2.1	3.0	1.6	0.9	0.5	1.85	1.00	0.51	0.26
8	3.8	3.8	5.4	3.8	5.4	2.9	1.5	0.8	3.29	1.78	0.91	0.46
10	5.9	5.9	8.4	5.9	8.4	4.5	2.3	1.2	5.14	2.78	1.42	0.71
12	8.5	8.5	12.0	8.5	12.0	6.5	3.3	1.7	7.40	4.01	2.04	1.03
14	11.6	11.6	16.4	11.6	16.3	8.9	4.5	2.3	10.08	5.45	2.78	1.40
16	15.1	15.1	21.4	15.1	21.3	11.6	5.9	3.0	13.16	7.12	3.63	1.82
18	19.1	19.1	27.0	19.1	27.0	14.6	7.5	3.8	16.66	9.02	4.60	2.31
20	23.6	23.6	33.3	23.6	33.3	18.1	9.2	4.7	20.57	11.13	5.67	2.85
24	34.0	34.0	48.0	34.0	48.0	26.0	13.3	6.7	29.62	16.03	8.17	4.11

ABOVE BEARING AREAS BASED ON TEST PRESSURE OF 150 PSI AND AN ALLOWABLE SOIL BEARING STRESS OF 2000 POUNDS PER SQUARE FOOT. DESIGNER IS CAUTIONED TO ENSURE THAT 2000 PSF BEARING IS AVAILABLE.

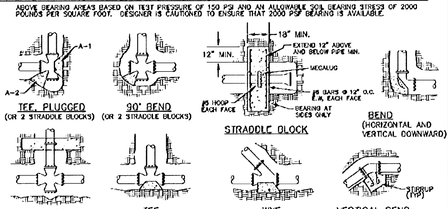

NOTES:

1. CONCRETE BLOCKING TO BE POURED AGAINST UNDISTURBED EARTH.
2. ALL CONCRETE TO BE CLASS 3000 MINIMUM.
3. INSTALL 6 MIL PLASTIC BETWEEN PIPE AND/OR FITTINGS BEFORE POURING CONCRETE BLOCKING.
4. CONCRETE SHALL BE KEPT CLEAR OF ALL JOINTS AND ACCESSORIES.
5. TIE RODS SHALL BE DEFORMED GALVANIZED COLD ROLLED STEEL, 60000 PSI TENSILE STRENGTH (ASTM A615) COAT WITH COAL TAR EPOXY AFTER INSTALLATION.
6. BEARING AREA REQ'D AT REDUCERS IS THE DIFFERENCE BETWEEN VALUES FOR DEAD END FOR EACH END SIZE (IE 6x8 = 3.8-2.1 = 1.7 S.F.)

RODS FOR VERTICAL BENDS		
FITTING SIZE	ROD SIZE	EMBEDMENT
10" AND LESS	#5	12"
12"-16" (11.25°)	#5	12"
12"-16" (22.5°)	#7	24"
12" (45°)	#7	24"
14"-16" (45°)	#9	30"

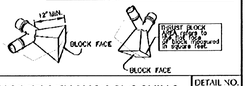

Tri-City Joint Water & Sanitary Authority
215 N. Old Pacific Highway
Myrtle Creek, Oregon 97457
541.863.3276

CONCRETE THRUST BLOCKING STANDARD DETAILS — DETAIL NO. W-700 — 7/17/06

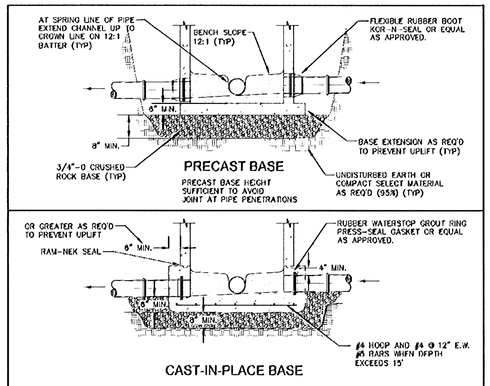

Tri-City Joint Water & Sanitary Authority
215 N. Old Pacific Highway
Myrtle Creek, Oregon 97457
541.863.3276

MANHOLE BASE STANDARD DETAILS — DETAIL NO. S-210 — 1/08/07

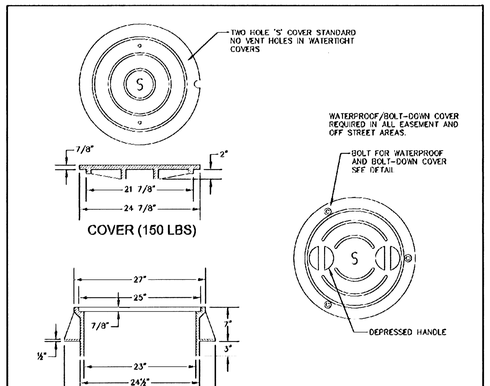

Tri-City Joint Water & Sanitary Authority
215 N. Old Pacific Highway
Myrtle Creek, Oregon 97457
541.863.3276

MANHOLE COVER AND FRAME DETAILS — DETAIL NO. S-250 — 5/17/05

CALL BEFORE YOU DIG !
ONE CALL: (800) 332-2344
OAR 952-001-0010 THROUGH
OAR 952-001-0090

REGISTERED PROFESSIONAL ENGINEER 14928 OREGON JULY 25, 1980 DAVID T. BUHL
EXPIRES: 12/31/2009

Rev.	Date	Dwg	Description
1	4/20/07	BWC	AGENCIES REVIEW
3	3/18/09	ANV	AS-BUILTS

i.e. ENGINEERING
809 SE Pine Street
Roseburg, Oregon 97470
PHONE (541) 673-0166
FAX (541) 440-9392
iemail@ieengineering.com

Project Name: CAMELOT
Title: CONSTRUCTION DETAILS

DES JPM | PROJECT NO. 973-21T2
DWG BWC | DATE: MARCH 27, 2007
CHK SNL | SCALE: AS SHOWN
APP SNL | SHEET: 7 OF 10

DO NOT DUPLICATE

DS-118