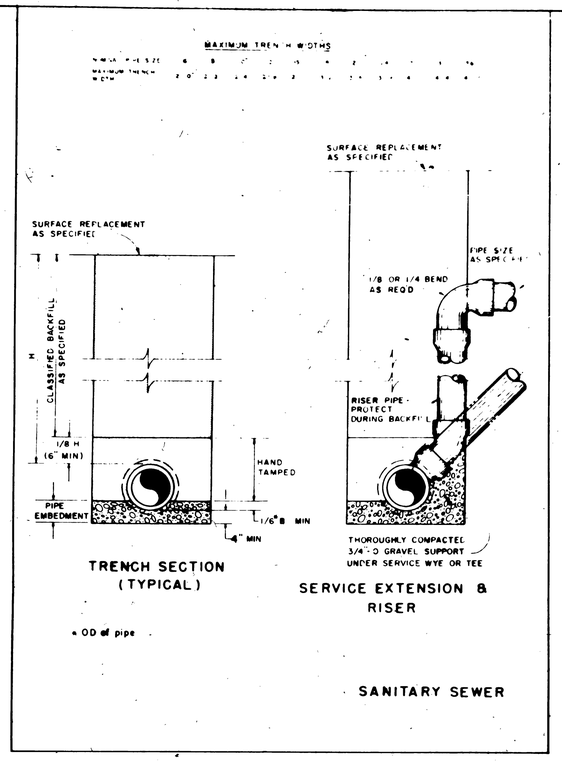

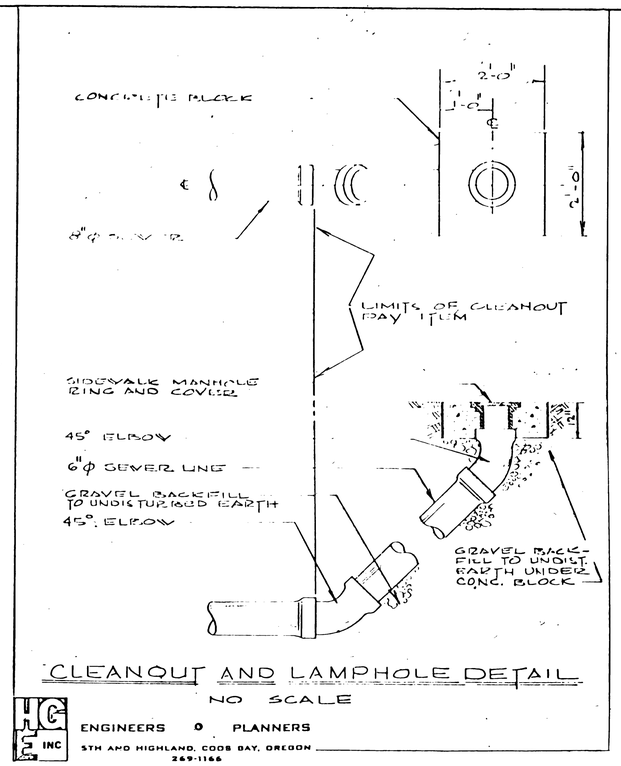

HGE INC
ENGINEERS o PLANNERS
5TH AND HIGHLAND, COOS BAY, OREGON
269-1166

FILED
AUG 10 1987
COUNTY SURVEYOR
DOUGLAS COUNTY, ORE.

REGISTERED PROFESSIONAL ENGINEER 5445 OREGON JULY 9, 1985 CHARLES L. YOUNGMAN

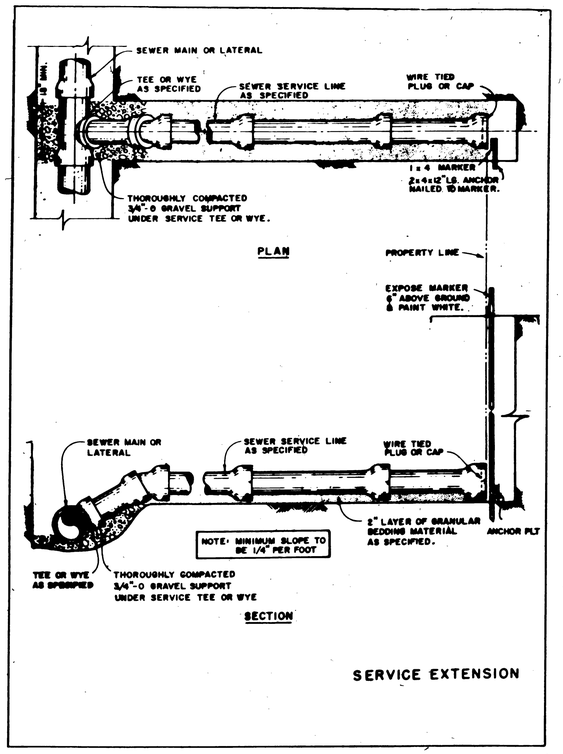

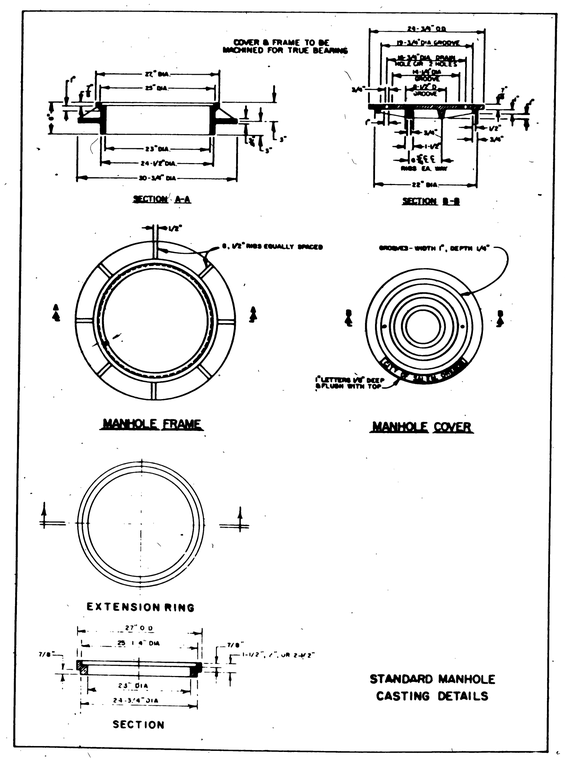

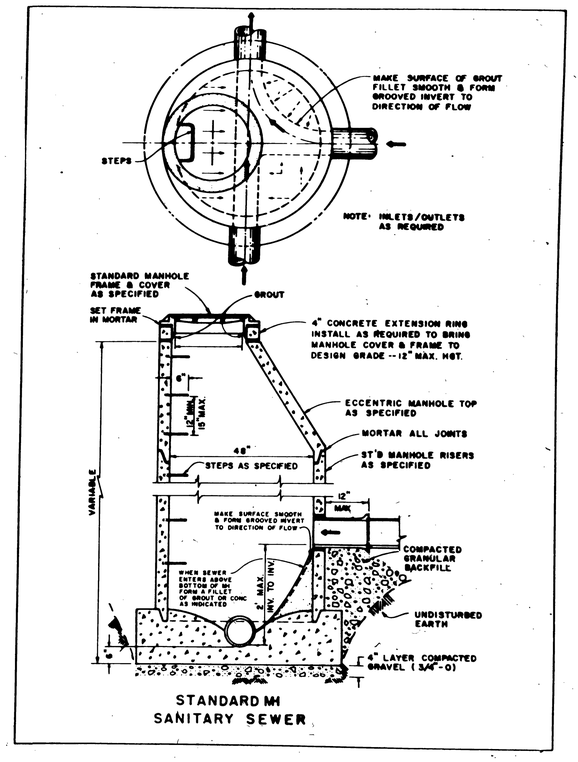

CHARLES L. YOUNGMAN
CIVIL & STRUCTURAL ENGINEERING
290 McGILCHRIST ST. S., SALEM, ORE. 97302
(503) 364-8207

BAUGHMAN TECHNICAL SERVICES, INC
P.O. BOX 222, ROSEBURG, OR.
Job No. 7902

Date: 4/4/79
Revisions:
Drn. By: C.L.Y.

A. + K. ESTATES SUBD. DOUGLAS COUNTY
ANDERSON AND KUSLER, SUBDIVIDER
SANITARY SEWER DETAILS

4 OF 5

MAR-WAN DR

DS-099