FILED
Date: 10-4-2007 By: LP
This survey consists of: 4 Pgs
Map: Co. Rd. 909
Narrative:
Corner Rpt:
DOUGLAS COUNTY SURVEYOR

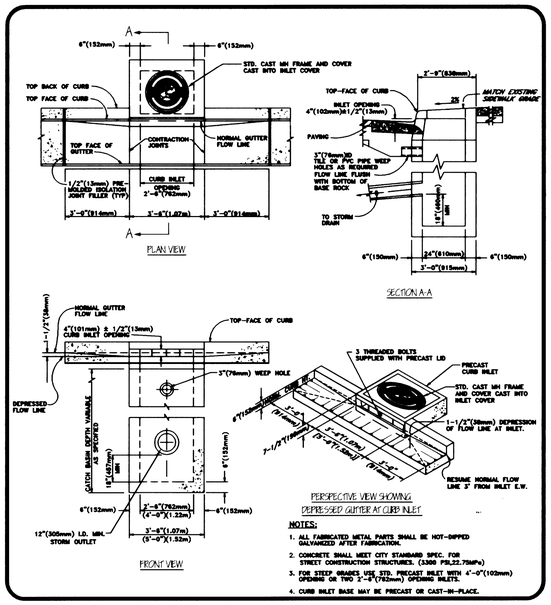

CITY OF ROSEBURG PUBLIC WORKS DEPARTMENT CHRIS S. BERQUIST, DIRECTOR		DATE:	SCALE: NTS
		BY: RLP	CHK:
STANDARD DRAWING	No. PW-011	DRWN: RLP	REV: 2/28/95
PRE-CAST STORM DRAIN CURB INLET		APPRVD: CSB	REV: 8/22/03
		PROJECT No: N/A	REV:

DEPARTMENT OF PUBLIC WORKS

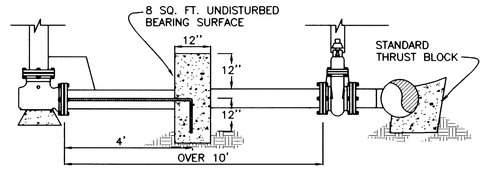

KEY WAY THRUST BLOCKS w/(2) 3/4" TIE RODS

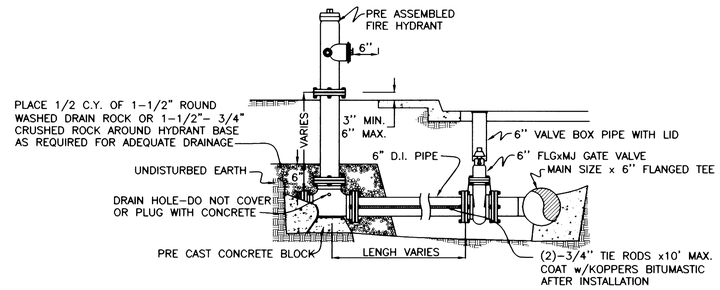

SPECIAL FIRE HYDRANT INSTALLATION

(THRUST BLOCKED)
STANDARD DWG #106

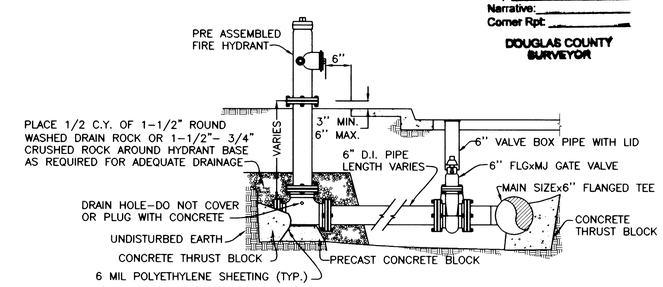

TYPICAL FIRE HYDRANT INSTALLATION

(THRUST BLOCKED)
STANDARD DWG #105

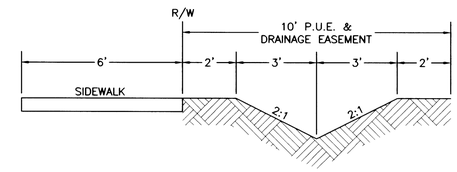

V-DITCH DETAIL

NTS

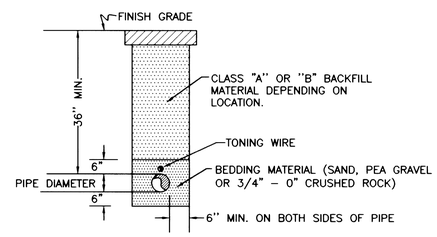

TYPICAL WATER MAINLINE TRENCH DETAIL

TYPICAL 2" COMBINATION AIR RELEASE VALVE ASSEMBLY

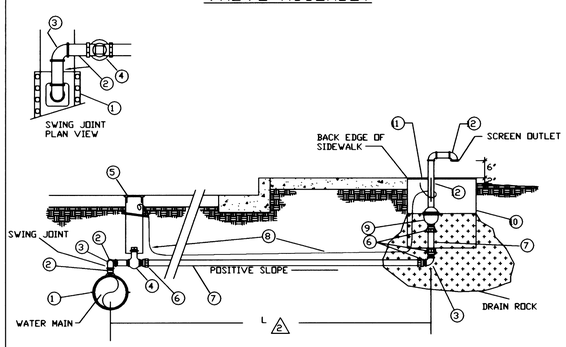

ITEM NO.	QTY.	DESCRIPTION 1
1	1	SERVICE SADDLE PER PLANS & SPECIFICATIONS,FORD FS 202, MAIN SIZE X 2" IPT
2	3	BRASS NIPPLE, 2" IPT X 4"
3	3	BRASS 90° ELL, 2" IPT
4	1	IBBM GATE VALVE, 2" FIPT
5	1	VALVE BOX AND LID (SEE STD. DWG. NO. 103)
6	4	2" 200 psi MIPT x PE PJ ADAPTER
7	AS REQ'D	2" 200 psi PE SIDR7 (PE 3408) PIPE (OD TO FIT CL 200 FITTINGS)
8	AS REQ'D	NO. 12 THHN STRANDED COPPER TONE WIRE, BLUE INSULATION
9	1	COMBINATION AIR RELIEF VALVE, APCO 145C
10	2	CONCRETE METER BOXES, BROOKS NO. 37, STACKED
11	1	FAB. DIAMOND PLATE COVER, 3/8" X 16" X 23"
12	AS REQ'D	2" SCH 80 PVC PIPE AND FITTINGS

1 OR APPROVED EQUAL
2 L = 13' UNLESS NOTED OTHERWISE ON PLAN, OMIT TONE WIRE WHERE L IS LESS THAN 10'.

CITY OF ROSEBURG	WATER DEPARTMENT	DATE: 10/13/1983 REV: 4/5/2001	STANDARD DWG. NO. 107B

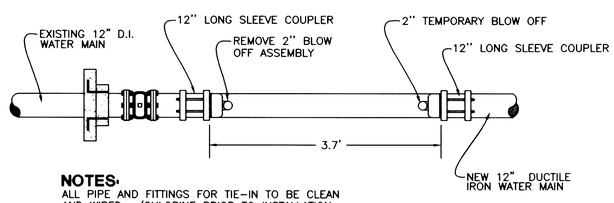

NOTES:
ALL PIPE AND FITTINGS FOR TIE-IN TO BE CLEAN AND WIPED w/CHLORINE PRIOR TO INSTALLATION

CONTRACTOR TO ALIGN NEW MAINLINE IN BOTH ALIGNMENT AND GRADE w/EXISTING 12" WATERLINE. CONNECTION TO EXISTING WATERLINE CAN ONLY BE MADE AFTER INSTALLATION, TESTING & DISINFECTION OF NEW WATERLINE HAS BEEN COMPLETED.

WATER TIE-IN DETAIL

REGISTERED PROFESSIONAL ENGINEER 58073PE OREGON JULY 13, 2004 ALEX M. PALM
EXPIRES: 12/31/2006

Rev.	Date	Dwg	Description
1	12/15/04	ANV	RUSA COMMENTS
2	12/17/04	ANV	D.C. REVIEW COMMENTS
3	1/17/05	ANV	ROSEBURG REVIEW COMMENTS
4	3/02/05	BWC	RE-ALIGNMENT OF ROAD
5	6/19/06	JDL	AS-BUILTS

i.e. ENGINEERING
741 SE Jackson Street
Roseburg, Oregon 97470
PHONE (541) 673-0166
FAX (541) 440-9392
iemail@ieengineering.com

Project Name: ROAD EXTENSION KENNETH FORD DRIVE
Title: STANDARD DETAILS

DES AMP	PROJECT NO. 1968-12 T2	
DWG ANV	DATE: APRIL 18, 2005	
CHK SNL	SCALE: AS SHOWN	
APP SNL	SHEET: 4 OF 4	

DO NOT DUPLICATE

R909DET2

Co. Rd. # 909 MP 0.24 - 0.96

CO. RD. #909 DETAILS