FILED
Date: 3/17/2008 By: JP
This survey consists of:
Map:
Narrative:
Corner Rpt:
DOUGLAS COUNTY SURVEYOR

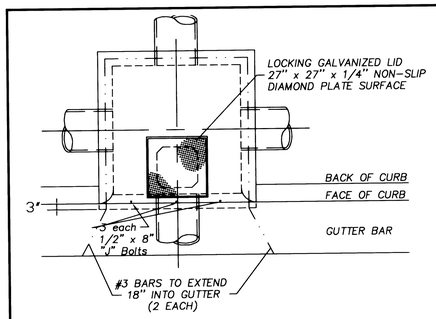

- ALL CONCRETE SHALL BE MIN. 3500 psi COMPRESSIVE FIELD STRENGTH AT 28 DAYS.
- UPPER SECTION TO BE 48" STORM DRAIN INLET BY WALT'S CONCRETE COMPANY OR EQUAL
- A ROUND MANHOLE TYPE LID MAY BE USED WITH APPROVAL OF THE ENGINEER

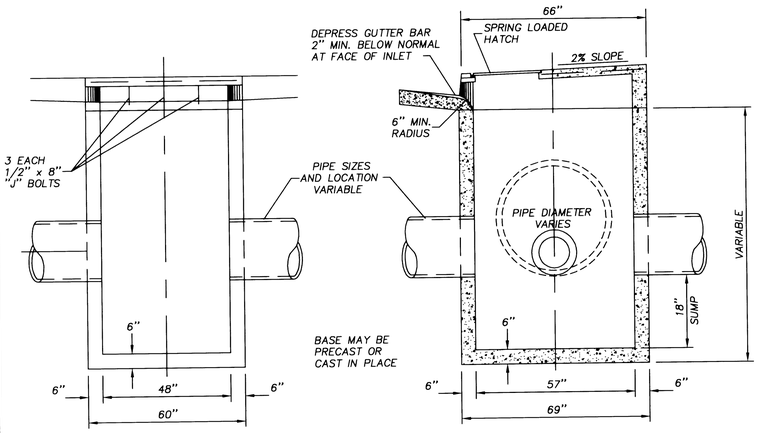

4MH CURB INLET CATCH BASIN DETAIL

NOT TO SCALE

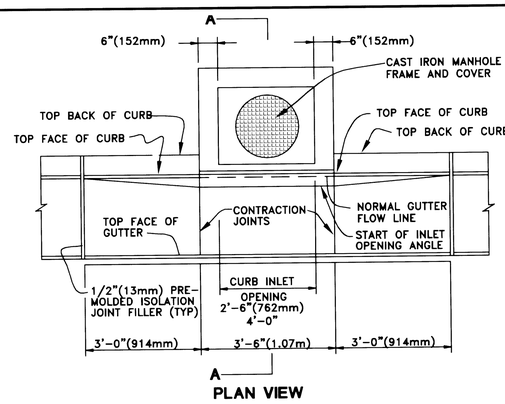

PLAN VIEW

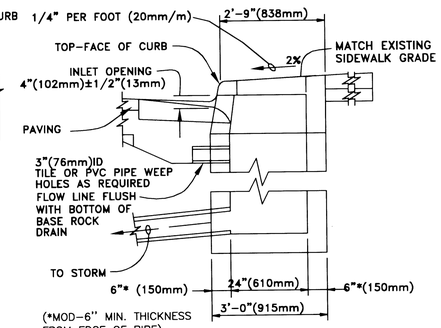

SECTION A-A

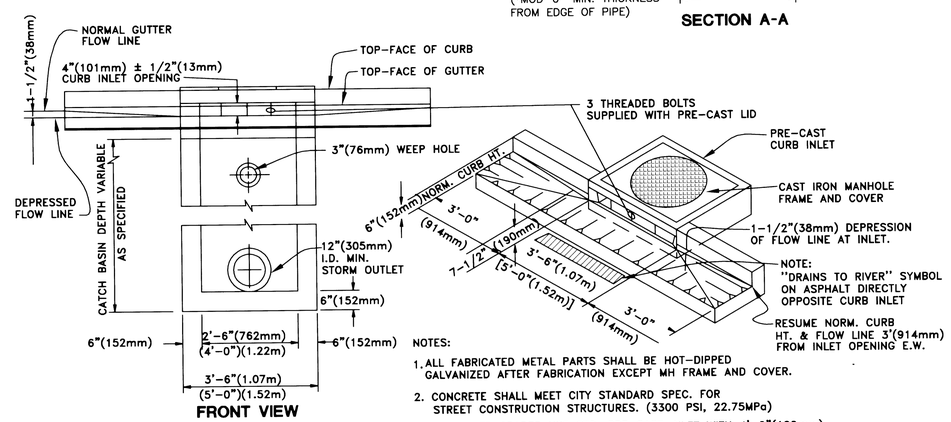

FRONT VIEW

NOTES:

1. ALL FABRICATED METAL PARTS SHALL BE HOT-DIPPED GALVANIZED AFTER FABRICATION EXCEPT MH FRAME AND COVER.
2. CONCRETE SHALL MEET CITY STANDARD SPEC. FOR STREET CONSTRUCTION STRUCTURES. (3300 PSI, 22.75MPa)
3. FOR STEEP GRADES USE STD. PRE-CAST INLET WITH 4'-0"(102mm) OPENING OR TWO 2'-6"(762mm) OPENING INLETS.
4. CURB INLET BASE MAY BE PRE-CAST OR CAST-IN-PLACE.

TYPICAL CG-3 INLET DETAIL

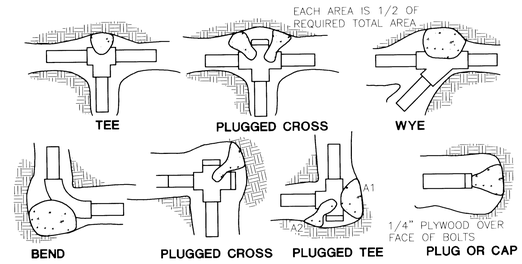

FITTING SIZE	TEE,WYE PLUG, OR CROSS	90° BEND PLUGGED CROSS	TEE PLUGGED ON RUN A1	TEE PLUGGED ON RUN A2	45° BEND	22 1/2° BEND	11 1/4° BEND
2	0.2	0.4	0.6	0.4	0.2	--	--
3	0.5	0.8	1.2	0.8	0.5	0.2	--
4	1.0	1.4	1.9	1.4	1.0	0.4	0.2
6	2.1	3.0	4.3	3.0	1.6	1.0	0.5
8	3.8	5.3	7.6	5.4	2.9	1.5	1.0
10	5.9	8.4	11.8	8.4	4.6	2.4	1.2
12	8.5	12.0	17.0	12.0	6.6	3.4	1.7
14	11.5	16.3	23.0	16.3	8.9	4.6	2.3
16	15.0	21.3	30.0	21.3	11.6	6.0	3.0
18	19.0	27.0	38.0	27.0	14.6	7.6	3.8
20	23.5	33.3	47.0	33.3	18.1	9.4	4.7
24	34.0	48.0	68.0	48.0	26.2	13.6	6.8

NOTE: ABOVE BEARING AREAS BASED ON TEST PRESSURE OF 150 p.s.i. AND AN ALLOWABLE SOIL BEARING STRESS OF 2,000 lbs. PER SQUARE FOOT. TO COMPUTE BEARING AREAS FOR DIFFERENT TEST PRESSURES AND SOIL BEARING STRESSES, USE THE FOLLOWING EQUATION: BEARING AREA = (TEST PRESSURE/150) x (2000/SOIL BEARING STRESS) x (TABLE VALUE)

NOTES:

1. CONCRETE THRUST BLOCKING TO BE POURED AGAINST UNDISTURBED EARTH.
2. KEEP CONCRETE CLEAR OF JOINT AND ACCESSORIES.
3. THE REQUIRED THRUST BEARING AREAS FOR SPECIAL CONNECTIONS ARE SHOWN ENCIRCLED ON THE PLANS, e.g. (15) INDICATES 15 SQUARE FEET BEARING AREA REQUIRED.
4. IF NOT SHOWN ON PLANS REQUIRED BEARING AREAS AT FITTING SHALL BE AS INDICATED ABOVE, ADJUSTED IF NECESSARY, TO CONFORM TO THE TEST PRESSURE(S) AND ALLOWABLE SOIL BEARING STRESS(ES) STATED IN THE SPECIAL SPECIFICATIONS.
5. BEARING AREAS AND SPECIAL BLOCKING DETAILS SHOWN ON PLANS. TAKE PRECEDENCE OVER BEARING AREAS AND BLOCKING DETAILS SHOWN ON THIS STANDARD DETAIL.

THRUST BLOCK DETAILS AND INFORMATION

NO SCALE

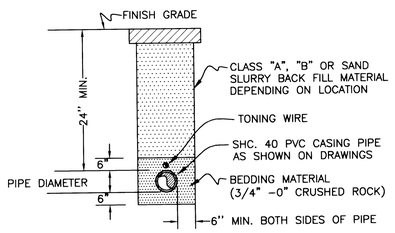

TYPICAL SERVICE LINE TRENCH DETAIL

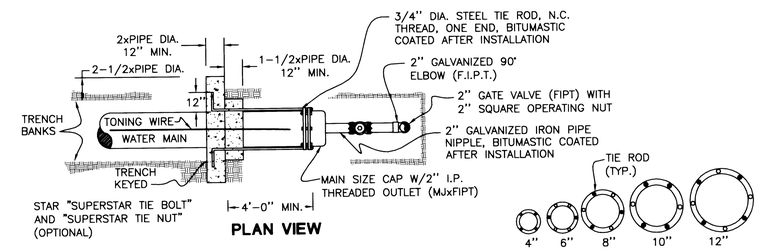

PLAN VIEW

TIE ROD PATTERN

4" – 2 TIE RODS
6" – 2 TIE RODS
8" – 3 TIE RODS
10"– 4 TIE RODS
12" – 4 TIE RODS

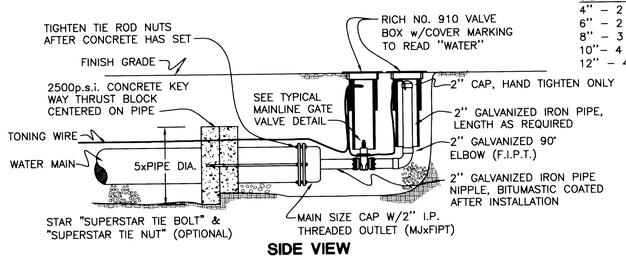

SIDE VIEW

TYPICAL 2" BLOW-OFF ASSEMBLY DETAIL

NOTE: CONTRACTOR PROVIDES AND INSTALLS PVC CASING. RCWD PROVIDES TAP AND INSTALLATION OF SERVICE LINE TO METER LOCATIONS.

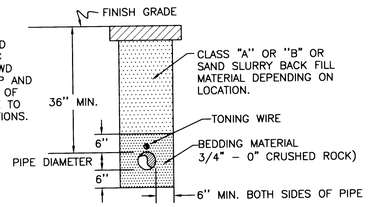

TYPICAL WATER MAINLINE TRENCH DETAIL

ROBERT'S CREEK WATER DISTRICT

CALL BEFORE YOU DIG !
ONE CALL: (800) 332-2344
OAR 952-001-0010 THROUGH
OAR 952-001-0090

REGISTERED PROFESSIONAL ENGINEER 18566 PE OREGON JAN. 10, 1986 STEVEN N. LOVEMARK
EXPIRES: 12/31/2006

Rev.	Date	Dwg	Description
1	7/1/05	JDL	AGENCY REVIEW
2	4/13/06	JDL	AS-BUILT PHASE 1A
3	8/9/06	NRJ	AS-BUILT PHASE 1B

i.e. ENGINEERING
505 SE Main Street
Roseburg, Oregon 97470
PHONE (541) 673-0166
FAX (541) 440-9392
iemail@ieengineering.com

Project Name: RIVER CREST ESTATES 2 PHASE 1
Title: DETAILS

DES DMA | PROJECT NO. 1944-03t2T5
DWG JDL | DATE: MAY 20, 2005
CHK SNL | SCALE: AS SHOWN
APP SNL | SHEET: 14 OF 18

375288D1

Co. Rd. # 366, 375J, 375N, 3750, 288B, 288C, 288D

DO NOT DUPLICATE

DETAIL SHEET CO. RDS. 366 375J 375N 3750 288B 288C 288D