BARRICADES

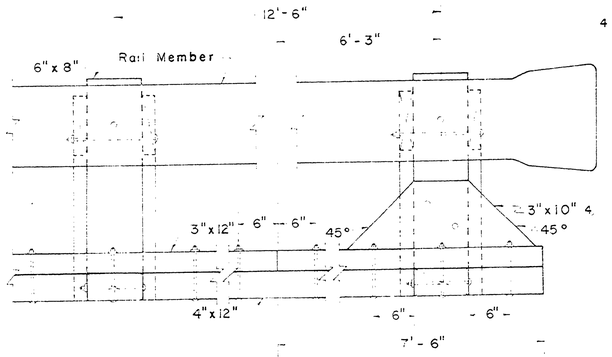

ELEVATION

4 Spaced 25'

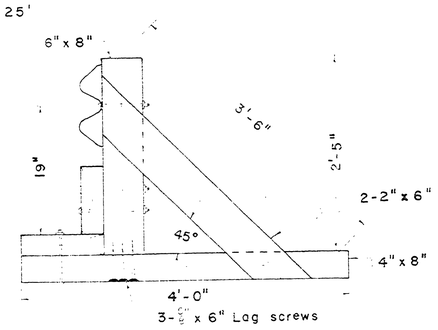

SECTION

TYPE - 1

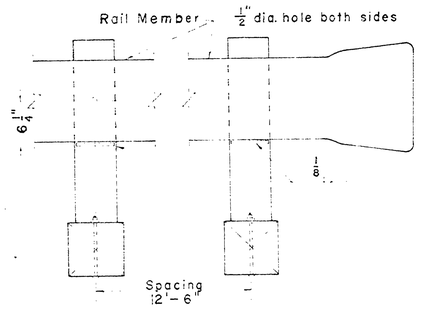

ELEVATION

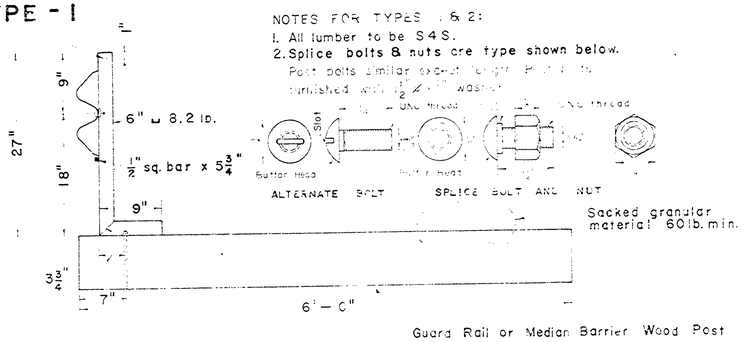

SECTION

NOTES FOR TYPES 1 & 2:
1. All lumber to be S4S.
2. Splice bolts & nuts are type shown below.
Post bolts similar except length [illegible] furnished with 1/2" x [illegible] washer.

TYPE - 2

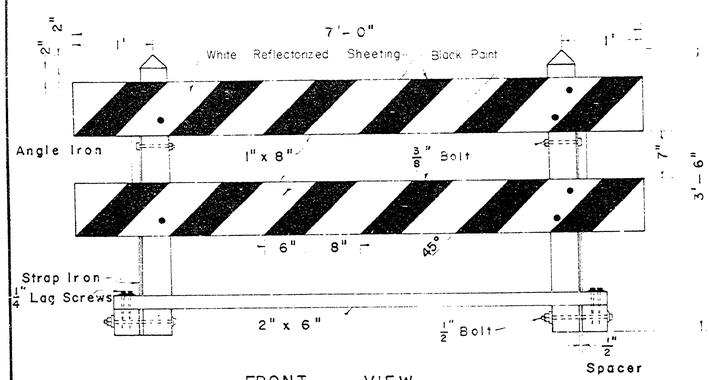

FRONT VIEW

PORTABLE

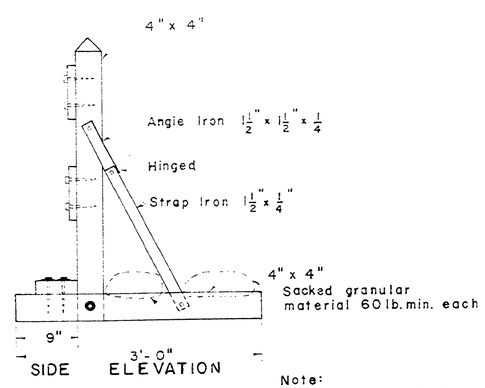

SIDE ELEVATION

Note:
All lumber to be S4S

NOT REVISED
AS CONSTRUCTED

DOUGLAS COUNTY RD. DEPT
BARRICADES
DEC. 1969 Standard Drwg. 13

0000BARR

Rd #4

#4