PARTITION PLAT

LOCATED IN THE NW 1/4 OF SECTION 13 T.22S., R.13., W.M. DOUGLAS COUNTY, OREGON

Douglas County Official Records
Daniel J. Loomis, County Clerk 2021-006435
NO FEE
00536021202100064350020022
03/18/2021 10:38:25 AM
PLAT-PAR Cnt=1 Stn=33 HAJOHNST
This is a no fee document

2021-0012 A

SURVEYOR'S CERTIFICATE:

I, KRISTIAN O. DEGROOT HEREBY CERTIFY THAT I HAVE CORRECTLY SURVEYED AND MARKED WITH PROPER MONUMENTS THE LANDS REPRESENTED ON THIS LAND PARTITION PLAT OF WHICH THE FOLLOWING IS A TRUE AND CORRECT DESCRIPTION:

A PARCEL OF LAND LOCATED IN THE NORTHEAST QUARTER OF THE NORTHWEST QUARTER (NE 1/4 OF THE NW 1/4) AND THE SOUTHEAST QUARTER OF THE NORTHWEST QUARTER (SE 1/4 OF THE NW 1/4) OF SECTION 13, TOWNSHIP 22 SOUTH, RANGE 13 WEST, WILLAMETTE MERIDIAN, BEING THOSE PARCELS OF LAND DESCRIBED IN INSTRUMENT NO. 2018–019774 AND INSTRUMENT NO. 2006–009038 AND A PORTION OF THAT PARCEL OF LAND DESCRIBED IN INSTRUMENT NO. 76–04148 ALL OF THE OFFICIAL RECORDS OF DOUGLAS COUNTY, OREGON AND BEING MORE PARTICULARLY DESCRIBED AS FOLLOWS:

BEGINNING AT A 5/8" IRON ROD ON THE NORTH LINE OF SAID SE 1/4 OF THE NW 1/4 FROM WHICH A BRASS DISC IN CONCRETE AT THE NW 1/16 CORNER OF SAID SECTION 13 BEARS N.87°43'24"W., 50.07 FEET; THENCE S.87°43'24"E. ALONG SAID NORTH LINE, 108.74 FEET TO A 5/8" IRON ROD AT THE SW CORNER OF SAID INSTRUMENT NO. 2018–019774; THENCE N.16°55'55"E., 60.00 FEET TO A 5/8" IRON ROD AT THE NORTH CORNER OF SAID INSTRUMENT NO. 2018–019774; THENCE S.28°40'50"E., 67.69 FEET TO A 5/8" IRON ROD AT THE SE CORNER OF SAID INSTRUMENT NO. 2018–019774; THENCE S.87°43'24"E. ALONG SAID NORTH LINE, 64.09 FEET TO A 5/8" IRON ROD AT THE NW CORNER THAT PARCEL OF LAND DESCRIBED IN INSTRUMENT NO. 2019–003419 OF THE OFFICIAL RECORDS OF DOUGLAS COUNTY, OREGON; THENCE S.18°19'00"E., 72.47 FEET TO A 5/8" IRON ROD AT THE SOUTH CORNER OF SAID INSTRUMENT NO. 2019–003419 AND THE WESTERLY RIGHT OF WAY LINE OF COUNTY ROAD NO. 87; THENCE THE FOLLOWING COURSES ALONG SAID WESTERLY RIGHT OF WAY LINE:

31.47 FEET ALONG THE ARC OF A 746.20 FOOT RADIUS CURVE TO THE RIGHT (THE LONG CHORD OF WHICH BEARS N.16°27'16"E., 31.47 FEET) TO A POINT,

N.17°50'35"E., 38.85 FEET TO A 5/8" IRON ROD:

THENCE S.87°38'10"E., 62.08 FEET TO A 5/8" IRON ROD ON THE EASTERLY RIGHT OF WAY LINE OF SAID COUNTY ROAD NO. 87; THENCE S.87°43'24"E. ALONG SAID NORTH LINE, 54.28 FEET TO A POINT; THENCE S.44°07'23"E., 275.23 FEET TO A 5/8" IRON ROD: THENCE S.27°18'26"E., 734.00 FEET TO A 5/8" IRON ROD ON THE NORTHERLY RIGHT OF WAY LINE OF SAID COUNTY ROAD NO. 87; THENCE THE FOLLOWING COURSES ALONG SAID NORTHERLY RIGHT OF WAY LINE: 130.14 FEET ALONG THE ARC OF A 227.57 FOOT RADIUS CURVE TO THE LEFT (THE LONG CHORD OF WHICH BEARS S.60°03'26"W., 128.37 FEET) TO A 5/8" IRON ROD, S.43°40'31"W., 59.29 FEET TO A 5/8" IRON ROD, 113.92 FEET ALONG THE ARC OF A 447.46 FOOT RADIUS CURVE TO THE RIGHT (THE LONG CHORD OF WHICH BEARS S.50°58'08"W., 113.62 FEET) TO A 5/8" IRON ROD, S.58°15'46"W., 210.14 FEET TO A 5/8" IRON ROD, 109.85 FEET ALONG THE ARC OF A 470.74 FOOT RADIUS CURVE TO THE LEFT (THE LONG CHORD OF WHICH BEARS S.51°34'38"W., 109.60 FEET) TO A 5/8" IRON ROD, S.44°53'31"W., 121.51 FEET TO A 5/8" IRON ROD, 7.85 FEET ALONG THE ARC OF A 486.18 FOOT RADIUS CURVE TO THE RIGHT (THE LONG CHORD OF WHICH BEARS S.45°21'16"W., 7.85 FEET) TO A 5/8" IRON ROD ON THE SOUTH LINE OF SAID SE 1/4 OF THE NW 1/4; THENCE N.89°16'55"W. ALONG SAID SOUTH LINE, 112.28 FEET TO A 1" IRON PIPE ON THE WEST LINE OF SAID INSTRUMENT NO. 2006–09038 AND IN THE CENTER OF MARIE CREEK; THENCE THE FOLLOWING COURSES ALONG THE CENTERLINE OF MARIE CREEK: N.1°24'02"W., 61.03 FEET TO A POINT, N.8°55'00"E., 89.00 FEET TO A POINT, N.15°25'00"E., 200.00 FEET TO A POINT, N.2°05'00"W., 230.00 FEET TO A POINT, N.8°35'00"W., 56.20 FEET TO A POINT, N.22°25'00"E., 25.37 FEET TO A POINT ON THE SOUTH LINE OF SAID INSTRUMENT NO. 76–04148; THENCE N.88°29'21"W. ALONG SAID SOUTH LINE, 240.06 FEET TO A 5/8" IRON ROD ON SAID EASTERLY RIGHT OF WAY LINE: THENCE N.88°29'21"W., 11.72 FEET TO THE SW CORNER OF SAID INSTRUMENT NO. 76–04148; THENCE N.0°46'44"W ALONG THE WEST LINE OF SAID INSTRUMENT NO. 76–04148, 59.47 FEET TO A 5/8" IRON ROD OF THE WESTERLY RIGHT OF WAY LINE OF SAID COUNTY ROAD NO. 87: THENCE CONTINUING N.0°46'44"W ALONG THE WEST LINE OF SAID INSTRUMENT NO. 76–04148, 595.67 FEET TO THE POINT OF BEGINNING.

LESS AND EXCEPTING COUNTY ROAD NO. 87.

ENCUMBRANCES

PARCELS 1 AND 2 ARE SUBJECT TO THE FOLLOWING RECORD MATTERS LISTED IN AMERITITLE STATUS OF RECORD TITLE REPORT NO. 303398AM, DATED OCTOBER 19, 2020.

- RESERVATIONS, EXCEPTIONS, RESTRICTIONS, CONDITIONS AND COVENANTS AS SET FORTH IN THAT DEED RECORDED AS INSTRUMENT NO. 76–04148, DATED MARCH 24, 1974.
- A 50 FOOT WIDE NATURAL NATIVE PLANT VISUAL BUFFER AS SET FORTH IN THAT DEED RECORDED AS INSTRUMENT NO. 2006–009038, DATED APRIL 10, 2006. AS PLOTTED HEREON.

NO RECORDED EASEMENTS WERE REPORTED.

ZONING & UTILITIES:

ZONING: MULTIPLE–FAMILY RESIDENTIAL (R–2), PUBLIC RESERVE (PR)
COMP. PLAN: HIGH DENSITY RESIDENTIAL (RHD), PUBLIC/SEMI–PUBLIC (PSP)
WATER: CITY OF REEDSPORT
SEWER: WINCHESTER BAY SANITARY DISTRICT
PLANNING DEPARTMENT FILE NO. 19–085

NARRATIVE:

THE PURPOSE OF THIS SURVEY WAS TO SURVEY AND PARTITION THOSE PARCELS OF LAND DESCRIBED IN INSTRUMENT NO. 76–04148, INSTRUMENT NO. 2018–019774 AND INSTRUMENT NO. 2006–009038 INTO 2 PARCELS AS APPROVED UNDER DOUGLAS COUNTY PLANNING DEPARTMENT FILE NO. 19–085.

REFERENCE SURVEYS:

1. M 154–24 R.E. WARE, DOUGLAS COUNTY SURVEYOR, 2007
2. M 145–28 R. SMITH, DEPUTY DOUGLAS COUNTY SURVEYOR, 2004
3. M 120–76 L. MONREAN, DEPUTY DOUGLAS COUNTY SURVEYOR, 1994
4. M 101–35 F. INGRAM, DOUGLAS COUNTY SURVEYOR, 1988
5. M 66–64 J. HOLLINGSWORTH, OREGON STATE PARKS DEPT. 1977
6. SHEET 00000093 OF 1967 PLANS FOR LIGHTHOUSE COUNTY ROAD NO. 87 BY G. GRUBB, DOUGLAS COUNTY ENGINEER
7. CS 51/252–4 R.J. HINTZ, 1963

THE NORTH LINE OF PARCEL 1 WAS SURVEYED AND/OR RETRACED AND MONUMENTED UNDER M 66–64, M 101–35, M 120–76, M 145–28 AND M 154–24. THE NW 1/16 CORNER,"A", AND A M 120–76 MONUMENT, "B", WERE FOUND AND HELD AND THE EASTERLY EXTENTION OF LINE "A"–"B" PRECISELY MATCHES THE 0.45 FOOT FALLING PER M 101–35, M 145–28 AND M 154–24 TO THE M 66–64 1 1/2" IRON PIPE, "C". THE NORTH LINE WAS ADJUSTED IN 1994 PER M 120–76 BUT THE ORIGINAL DEEDS, INSTRUMENT NO. 2001–5033 (CORRECTION DEED INSTRUMENT NO. 2018–019774) AND INSTRUMENT NO. 2001–5034 (CORRECTION DEED INSTRUMENT NO. 2019–003419), WERE NOT RECORDED UNTIL 2001. THE COURSES PER INSTRUMENT NO. 2001–5034 EXACTLY MATCH M 120–76. INSTRUMENT NO 2001–5033 WAS WRITTEN TO THE CS 51/252–4 RECORD BEARINGS. THE SW CORNER INSTRUMENT NO 2001–5033 WAS MONUMENTED AT THE M 154–24 RECORD DISTANCE FROM THE NW 1/16 CORNER AND THE NORTH AND SE CORNERS WERE MONUMENTED PER THE DEED. POINT "B" PER M 120–76 WAS HELD AS THE NE CORNER OF INSTRUMENT NO 2001–5034 AND THE RECORD M 120–76 ANGLE AT "B" WAS HELD TO MONUMENT THE SOUTH CORNER ON THE WESTERLY RIGHT OF WAY LINE OF LIGHTHOUSE COUNTY ROAD NO. 87 PER DEED AND M 120–76. THE WEST AND SOUTH LINES OF PARCEL 1 WERE CONTROLLED BY M 101–35 MONUMENTS "A", "D" AND "E". THE WEST LINE OF PARCEL 1 WAS MONUMENTED PARALLEL TO LINE "A"–"D". THE SOUTH LINE OF PARCEL 1 WAS CONTROLLED BY MONUMENTS "D" AND "E".

THE EAST LINE OF PARCEL 2 WAS CONTROLLED BY MONUMENTS FOUND AND HELD PER M 154–24 AND INSTRUMENT NO. 2006–009038. THE WEST LINE OF PARCEL 2 WAS CONTROLLED BY MONUMENT "F" PER M 66–64 ON THE SOUTH LINE OF THE NW 1/4 OF SECTION 13 AND THE CENTERLINE OF MARIE CREEK AS SURVEYED BETWEEN MONUMENT "F" AND THE CENTERLINE OF MARIE CREEK EAST (L34) OF MONUMENT "E" PER M 154–24. THE NORTHERLY PORTION OF THIS BOUNDARY WAS HELD ON THE CENTERLINE OF MARIE CREEK AS COMPUTED PER INSTRUMENT NO. 2006–009038 AND THEN SCALED AND ROTATED BETWEEN POINT "C" AND THE CENTERLINE OF MARIE CREEK EAST (L34) OF POINT "E". THE SOUTH LINE OF PARCEL 2 WAS CONTROLLED BY MONUMENTS "F" AND "G" AND THE NORTH RIGHT OF WAY LINE OF LIGHTHOUSE COUNTY ROAD NO. 87. THE M 154–24 MONUMENT AT "G" WAS FOUND DISTURBED AND WAS RESET AT ITS M 154–24 POSITION.

LIGHTHOUSE COUNTY ROAD NO. 87 WAS COMPUTED PER THE 1967 PLANS AND INSTRUMENT NO. 74–01909. I HELD THE M 154–24 CENTERLINE BETWEEN STATION PC 19+57.52 AND STATION PT 29+32.75. THE SPIKE WHICH WAS FOUND UNDER M 120–76 AT STATION PT 46+04.02 WAS MISSING AND I COMPUTED AND HELD ITS POSITION PER THE M 120–76 RECORD. I FOUND AN APPROXIMATE 0.6 FOOT ERROR OF CLOSURE BETWEEN THE M 120–76 SPIKE AT STATION 46+04.02 PT AND STATION 29+32.75 PT PER M 154–24. I FORCED THIS ERROR INTO TANGENTS L20 AND L21 AND HELD ALL OTHER RECORD TANGENT DISTANCES AND ALL RECORD CURVE RADIUSES BETWEEN STATION PC 19+57.52 AND STATION POT 47+00.00 PER THE 1967 PLANS AS ROTATED TO THE M 154–24 BASIS OF BEARINGS.

THIS SURVEY WAS PERFORMED BY STEPHEN FLAUSE AND JEFF LORSUNG USING A NIKON DTM 520 TOTAL STATION WITH COMPUTATIONS AND DRAFTING BY KRIS DEGROOT, DOUGLAS COUNTY SURVEYOR.

TAX COLLECTORS CERTIFICATE:

I HEREBY CERTIFY THAT ALL TAXES AND SPECIAL ASSESSMENTS OR OTHER CHARGES REQUIRED BY LAW HAVE BEEN PAID.

DOUGLAS COUNTY TAX COLLECTOR — *DATE* 3-18-21

APPROVALS:

COUNTY PLANNING DIRECTOR — *DATE* 3/18/2021

COUNTY SURVEYOR Deputy — *DATE* 3/18/2021

COUNTY CLERK ★ DOUGLAS COUNTY ★ STATE OF OREGON

FILED THIS 18th *DAY OF* March *2021,*
BY Heidi Johnston, Deputy
DOUGLAS COUNTY CLERK

DECLARATION:

KNOW ALL PEOPLE BY THESE PRESENT THAT DOUGLAS COUNTY, IS THE OWNER OF THE LAND REPRESENTED ON THIS LAND PARTITION PLAT AND MORE PARTICULARLY DESCRIBED IN THE ACCOMPANYING SURVEYOR'S CERTIFICATE AND IN ACCORDANCE WITH THE PROVISIONS OF CHAPTER 92, OREGON REVISED STATUTES, HAS CAUSED THE SAME TO BE SURVEYED AND PARTITIONED AS SHOWN ON THE FACE OF THIS LAND PARTITION PLAT.

COMMISSIONER TOM KRESS, CHAIR

COMMISSIONER CHRIS BOICE

COMMISSIONER TIM FREEMAN

ACKNOWLEDGMENT:

STATE OF OREGON)
SS
COUNTY OF DOUGLAS)

KNOW ALL PEOPLE BY THESE PRESENTS, ON THIS 17th DAY OF March, 2021, BEFORE ME, A NOTARY PUBLIC IN AND FOR SAID STATE AND COUNTY, PERSONALLY APPEARED COMMISSIONER TOM KRESS, CHAIR, COMMISSIONER CHRIS BOICE AND COMMISSIONER TIM FREEMAN TO ME KNOWN TO BE THE PERSONS DESCRIBED, IN AND WHO EXECUTED THE FOREGOING DECLARATION, WHO, BEING DULY SWORN, DID SAY THAT THEY EXECUTED THE SAME FOR THE PURPOSES SET FORTH THEREIN.

IN TESTIMONY WHEREOF, I HAVE HEREUNTO SET FORTH MY HAND AND AFFIXED MY OFFICIAL SEAL THE DAY AND YEAR FIRST ABOVE WRITTEN.

NOTARY PUBLIC, STATE OF OREGON

OFFICIAL STAMP
JENNIFER M. MILLER
NOTARY PUBLIC - OREGON
COMMISSION NO. 1006718
MY COMMISSION EXPIRES DECEMBER 13, 2024

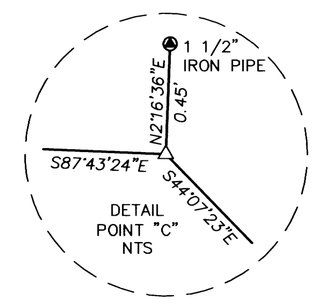

DOUGLAS COUNTY SURVEYOR
ROOM 105 JUSTICE BUILDING
1036 SE DOUGLAS AVENUE
ROSEBURG, OREGON 97470
PHONE (541) 440-4272

DOUGLAS COUNTY PARKS DEPARTMENT
1036 SE DOUGLAS AVENUE
ROSEBURG, OR 97470

SCALE: N/A	Lighthouse Partition.dwg
DATE: MARCH, 2021	SHEET 1 OF 2

REGISTERED
PROFESSIONAL
LAND SURVEYOR
OREGON
JULY 17, 1981
KRISTIAN O. DEGROOT
1941
RENEWAL DATE: 12-31-2021

2021-0012 A