County Surveyor's Record, Douglas County, Oregon

TOWNSHIP 22 SOUTH, RANGE 8 WEST, W. M.

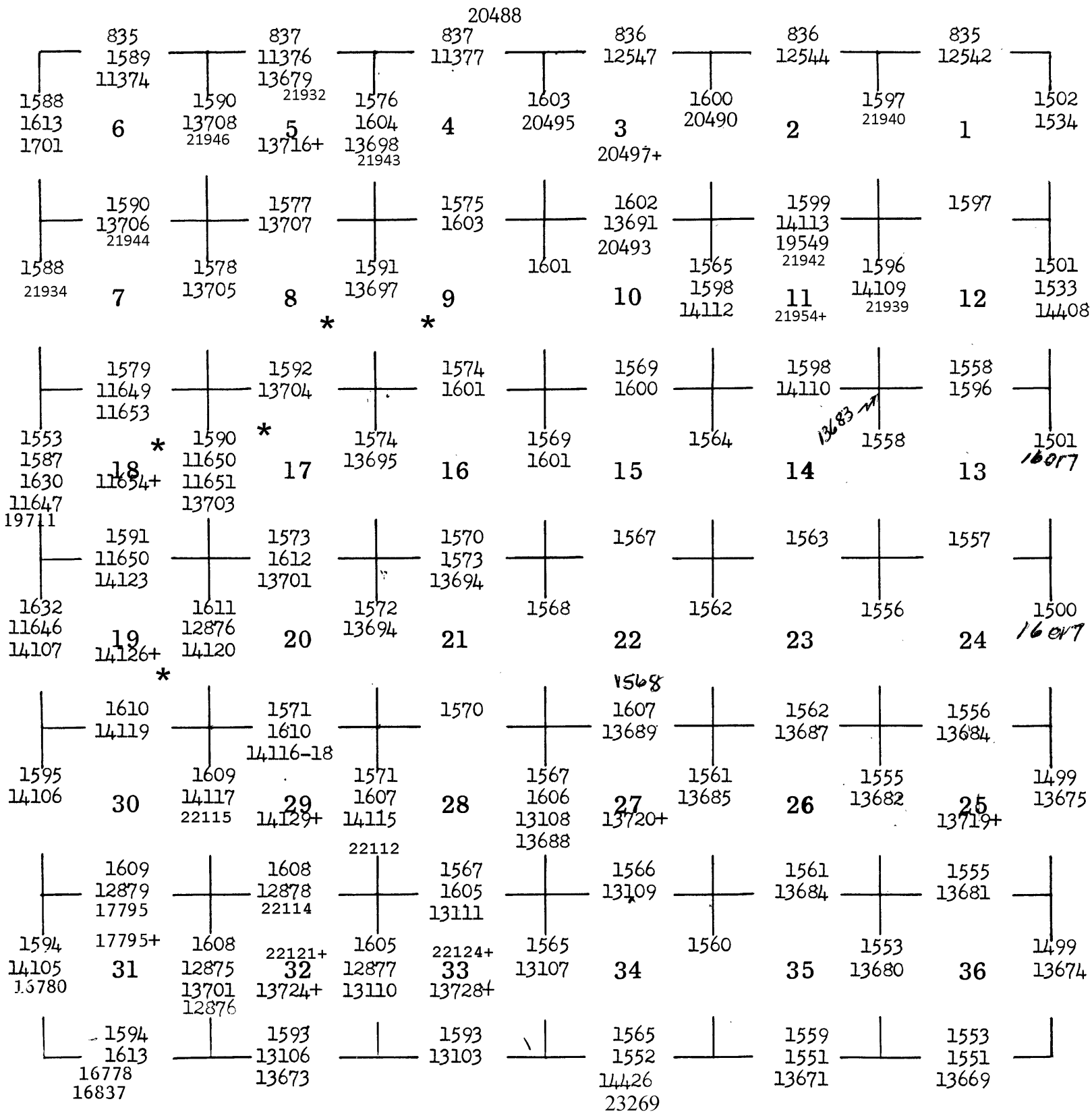

* No line calls in line notes - Corner info only, see pgs 22214-22240 and BLM Map 2010-2 T22-8 (DLC 46, 47, 51, 57)

Retracement

DLC #49 Vol. 33, Pg. 13710+

DLC #54 Vol. 33, Pg. 13712+

DLC #45 Vol. 34, Pg. 14124+

DLC #45 VOL. 56 PAGES 22117+

DLC #40 R8W Pg., 14419+

~~DLC #44, Pg. 14419+~~

DLC #49 Vol. 56 Pages 21947+

SUBD LOT 7 SEC. 18 - VOL 27 PG. 11656

* 7/25/69 Survey Suspended 2/4/93
SECS 11, 19, 30 & 29